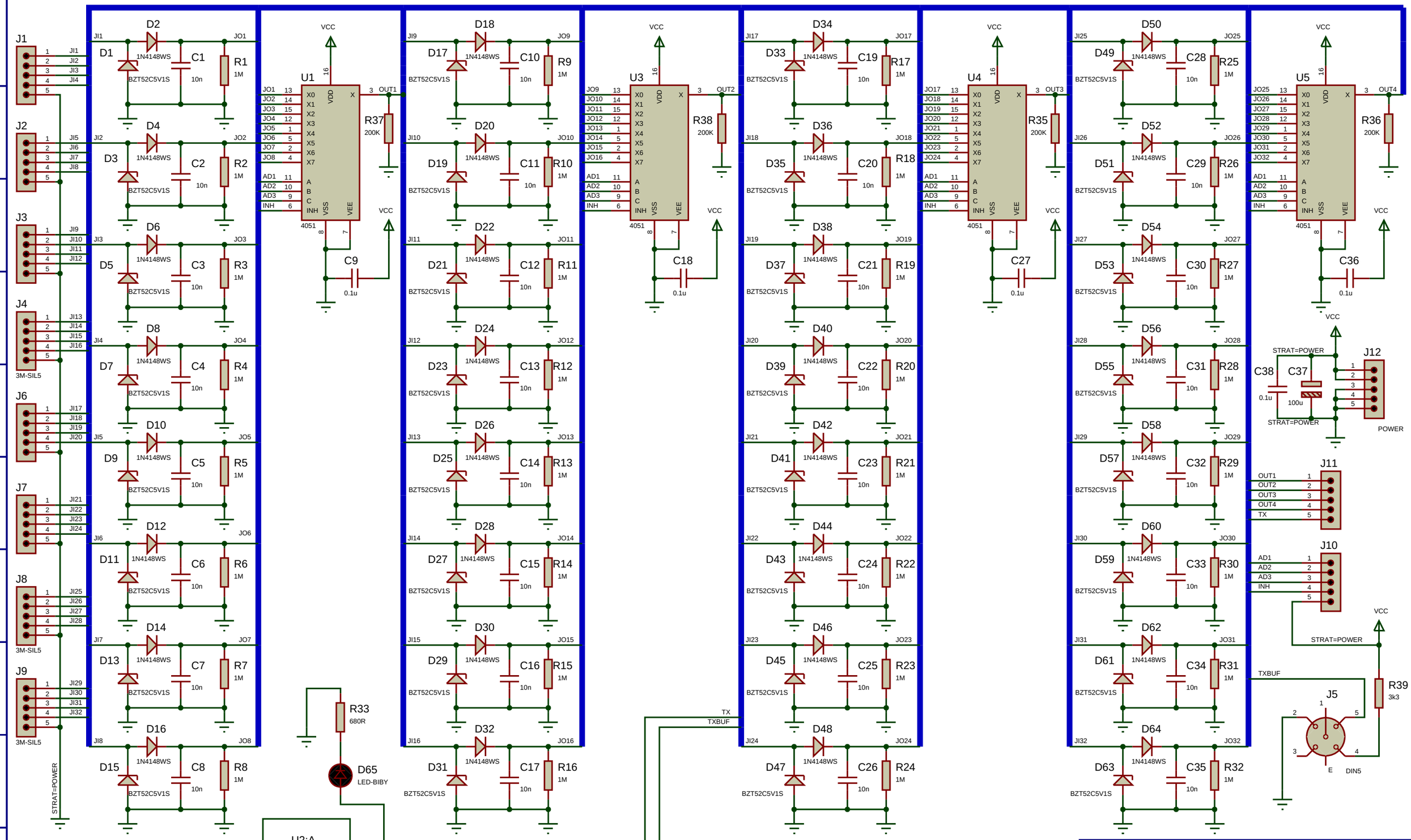
J1
J2
J3
J4
J6
J7
J8
J9
3M-SIL5
STRAT=POWER
U1
U2
U3
U4
U5
4051
74HC02
VCC
OUT1
OUT2
OUT3
OUT4
TX
TXBUF
R33
680R
D65
LED-BIBY
R34
220R
U2:A
U2:B
J12
POWER
J11
J10
J5
DIN5
R39
3k3
C38
C37
0.1u
100u
FILE NAME: Mutiplex_var1.DSN
DESIGN TITLE: D:\Proejects_freelanse\PCB_design_Elance_oyik\Pr
PATH: D:\Proejects_freelanse\PCB_design_Elance_oyik\Proteus_files\Mutiplex_var1
BY: <NONE>
REV:<NONE>
DATE: 07.10.2010 г.
PAGE: 1 Of 1
TIME: 13:06:17